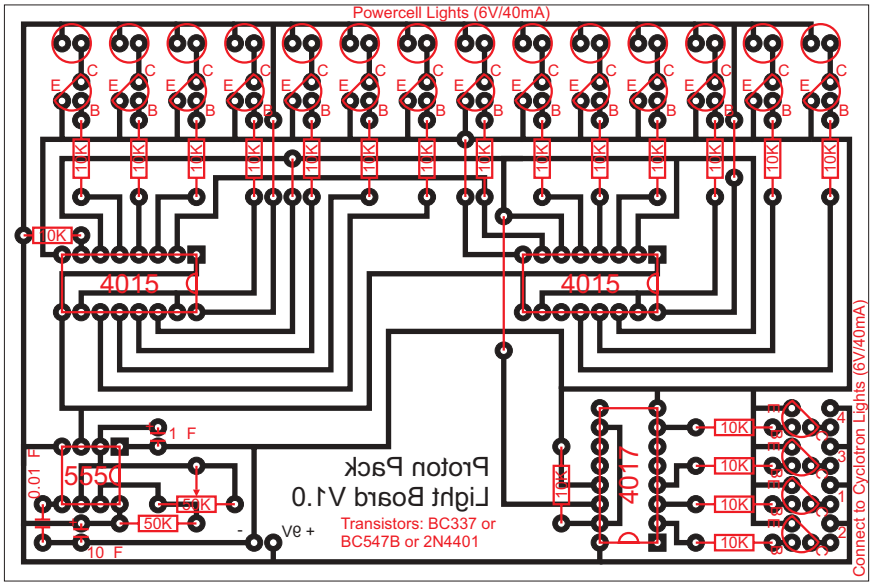

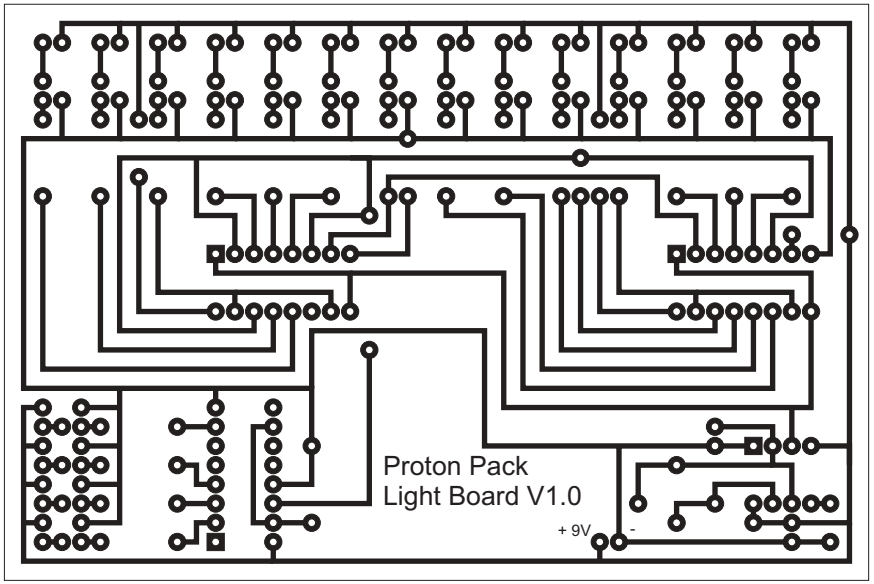

Materials:

- 2 x 4015 (Dual 4-Stage Shift Register IC)
- 1 x 4017 (Decade Counter IC)
- 1 x NE 555 (Timer IC)
- 18 x BC337 Transistor (or BC547B or 2N4401)
- 1 x 50k Potentiometer
- 1 x 50k 1/4W Resistor
- 20 x 10k 1/4W Resistor
- 1 x 10 F Electrolyt Capacitor
- 1 x 1 F Electrolyt Capacitor
- 1 x 0.0 1 F Ceramic Capacitor
- 18 x 6V 40mA Light Bulbs

optional (but recommended):

- 3 x 16 pin IC socket
- 1 x 8 pin IC socket